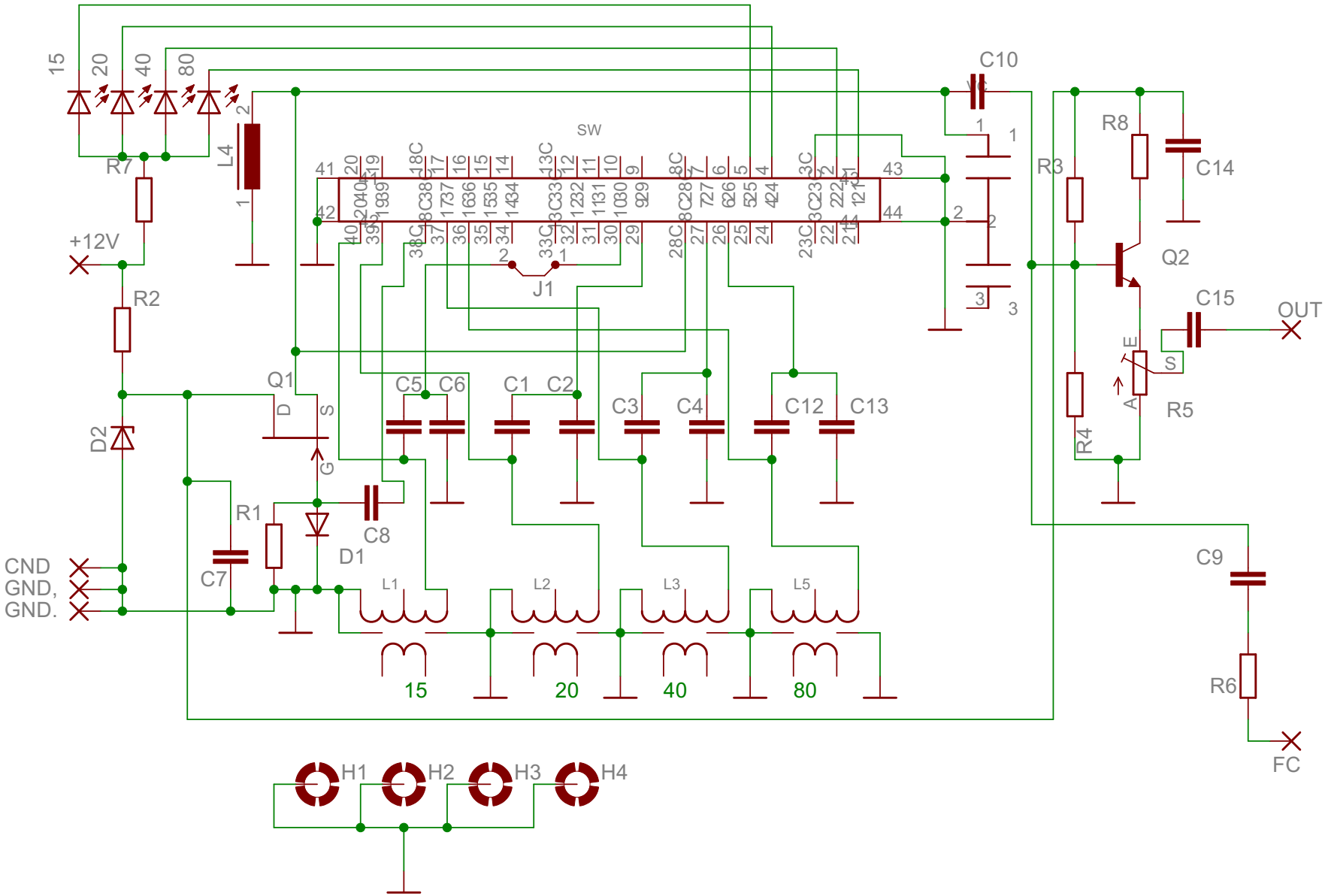
15
20
40
80
R7
L4
+12V
R2
D2
Q1
D
S
G
R1
C7
C8
D1
CND
GND,
GND.
SW
J1
C5
C6
C1
C2
C3
C4
C12
C13
L1
L2
L3
L5
15
20
40
80
C10
R3
R8
C14
Q2
C15
OUT
E
S
A
R5
R4
C9
R6
FC
H1
H2
H3
H4